Inceel

When aesthetics are a vital necessity in the décor of your home and office spaces, Adeo responds with Inceel, the screen that is visible only when it is in use. Owing to the innovative assembly system the structure is positioned inside a false ceiling and the characteristic threaded bars are height-adjusted by means of a thread lock to suit individual practical requirements. This technique allows a quick and straightforward installation at a reasonable cost, whether carried out autonomously or by third parties.
Practicality meets aesthetics: by applying two plugs on the ends of the case the anchoring system is hidden and the visual impact significantly reduced, thereby favouring an overall harmonization with the surrounding ambient.
Inceel is the ideal solution for enjoying total and uncluttered freedom in one's home or office spaces: the screen is there but it doesn't show.

See page 57 for Technical data

Create your own screen with the PSS

- **Personalized dimensions:** width and height
- **Roller type:** motorized or radio integrated
- **Case:** available only with case
- **Case color:** available only in white
- **Height of Top:** from 5 to 45 cm
- **Projection surface fall:** front or rear with optional reverse-roll installation
- **Side of command/motor:** right only

Projection Surfaces (see page 6)

- ReferenceWhite / ReferenceGrey
- VisionWhite / VisionWhitePro
- VisionAcoustik
- VisionRear DB / VisionRear only without black borders

Surfaces Fireproof Certifications

M1 M2

Standard Accessories

- Kit containing eight 50 cm threaded bars for installation with maximum height of 1 m
- Unipolar selector switch
- Remote control (only for radio-integrated version)
- End plates for closing the plasterboard

PSS Formats

1:1 | 1.33:1 (4:3) | 1.60:1 (16:10) | 1.78:1 (16:9) | 2.35:1 (21:9) | 2.37:1 | 2.40:1

Optional Accessories

- Extension brackets for screens up to 60 cm
- Receiver and RF remote control for motorized screen (3 modalities: basic, automatic and compatible with domotic systems)
- Receiver and infrared remote control

Inceel 5 cm borders

Aspect Ratio	Viewing Width	Viewing Height	Diagonal Inches	Overall Width	Overall Height	Surface Width	Surface Height	Standard Drop	Total Maximum Drop	Packaging Dimensions	Net Weight	Gross Weight
	C	D	N	A	B	F	G	P	mm	mm	kg	kg
1,00 (1:1)	1900	1900	**106**	2170	2151	2000	2000	50	50	2183x200x210	17	22
	2100	2100	**117**	2370	2351	2200	2200	50	50	2383x200x210	18	23
	2400	2400	**134**	2670	2701	2500	2550	100	50	2683x200x210	19	24
	2900	2900	**161**	3170	3201	3000	3050	100	50	3183x200x210	21	26
1,33 (4:3)	1900	1429	**94**	2170	1680	2000	1529	50	450	2183x200x210	17	22
	2100	1579	**103**	2370	1830	2200	1679	50	450	2383x200x210	18	23
	2400	1805	**118**	2670	2056	2500	1905	50	350	2683x200x210	19	24
	2900	2180	**143**	3170	2481	3000	2330	100	450	3183x200x210	21	26
	3400	2556	**167**	3670	2857	3500	2706	100	400	3683x200x210	23	30
1,6 (16:10)	1900	1188	**88**	2170	1439	2000	1288	50	450	2183x200x210	16	21
	2100	1313	**97**	2370	1564	2200	1413	50	450	2383x200x210	17	22
	2400	1500	**111**	2670	1751	2500	1600	50	450	2683x200x210	18	23
	2900	1813	**135**	3170	2064	3000	1913	50	450	3183x200x210	20	25
	3400	2125	**158**	3670	2426	3500	2275	100	400	3683x200x210	22	27
	3900	2438	**181**	4170	2739	4000	2588	100	400	4183x200x210	24	29
1,78 (16:9)	1900	1067	**86**	2170	1318	2000	1167	50	450	2183x200x210	16	21
	2100	1180	**95**	2370	1431	2200	1280	50	450	2383x200x210	17	22
	2400	1348	**108**	2670	1599	2500	1448	50	450	2683x200x210	18	23
	2900	1629	**131**	3170	1880	3000	1729	50	450	3183x200x210	20	25
	3400	1910	**154**	3670	2211	3500	2060	100	450	3683x200x210	22	27
	3900	2191	**176**	4170	2492	4000	2341	100	300	4183x200x210	24	29
2,35 (21:9)	1900	809	**81**	2170	1060	2000	909	50	450	2183x200x210	16	21
	2100	894	**90**	2370	1145	2200	994	50	450	2383x200x210	17	22
	2400	1021	**103**	2670	1272	2500	1121	50	450	2683x200x210	18	23
	2900	1234	**124**	3170	1485	3000	1334	50	450	3183x200x210	20	25
	3400	1447	**145**	3670	1748	3500	1597	100	450	3683x200x210	22	27
	3900	1660	**167**	4170	1961	4000	1810	100	300	4183x200x210	24	29
2,37	1900	802	**81**	2170	1053	2000	902	50	450	2183x200x210	16	21
	2100	886	**90**	2370	1137	2200	986	50	450	2383x200x210	17	22
	2400	1013	**103**	2670	1264	2500	1113	50	450	2683x200x210	18	23
	2900	1224	**124**	3170	1475	3000	1324	50	450	3183x200x210	20	25
	3400	1435	**145**	3670	1736	3500	1585	100	450	3683x200x210	22	27
	3900	1646	**167**	4170	1947	4000	1796	100	300	4183x200x210	24	29
2,40	1900	792	**81**	2170	1043	2000	892	50	450	2183x200x210	16	21
	2100	875	**90**	2370	1126	2200	975	50	450	2383x200x210	17	22
	2400	1000	**102**	2670	1251	2500	1100	50	450	2683x200x210	18	23
	2900	1208	**124**	3170	1459	3000	1308	50	450	3183x200x210	20	25
	3400	1417	**145**	3670	1718	3500	1567	100	450	3683x200x210	22	27
	3900	1625	**166**	4170	1926	4000	1775	100	300	4183x200x210	24	29

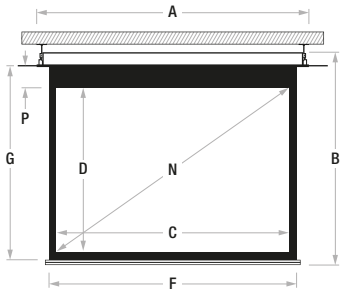

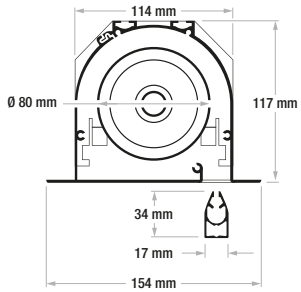

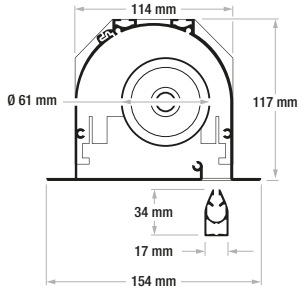

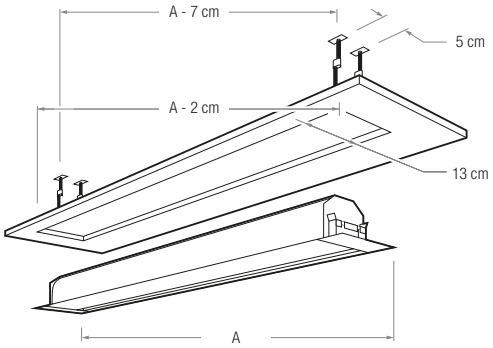

Inceel 7 cm borders

Aspect Ratio	Viewing Width	Viewing Height	Diagonal Inches	Overall Width	Overall Height	Surface Width	Surface Height	Standard Drop	Total Maximum Drop	Packaging Dimensions	Net Weight	Gross Weight
	C	D	N	A	B	F	G	P	mm	mm	kg	kg
1,00 (1:1)	1860	1860	**104**	2170	2151	1960	2000	70	70	2183x200x210	17	22
	2060	2060	**115**	2370	2351	2160	2200	70	70	2383x200x210	18	23
	2360	2360	**131**	2670	2681	2460	2530	100	70	2683x200x210	19	24
	2860	2860	**159**	3170	3181	2960	3030	100	70	3183x200x210	21	26
1,33 (4:3)	1860	1398	**92**	2170	1689	1960	1538	70	450	2183x200x210	17	22
	2060	1549	**101**	2370	1840	2160	1689	70	450	2383x200x210	18	23
	2360	1774	**116**	2670	2065	2460	1914	70	350	2683x200x210	19	24
	2860	2150	**141**	3170	2471	2960	2320	100	450	3183x200x210	21	26
	3360	2526	**166**	3670	2847	3460	2696	100	400	3683x200x210	23	30
1,60 (16:10)	1860	1163	**86**	2170	1454	1960	1303	70	450	2183x200x210	16	21
	2060	1288	**96**	2370	1579	2160	1428	70	450	2383x200x210	17	22
	2360	1475	**110**	2670	1766	2460	1615	70	450	2683x200x210	18	23
	2860	1788	**133**	3170	2079	2960	1928	70	450	3183x200x210	20	25
	3360	2100	**156**	3670	2421	3460	2270	100	400	3683x200x210	22	27
	3860	2413	**179**	4170	2734	3960	2583	100	400	4183x200x210	24	29
1,78 (16:9)	1860	1045	**84**	2170	1336	1960	1185	70	450	2183x200x210	16	21
	2060	1157	**93**	2370	1448	2160	1297	70	450	2383x200x210	17	22
	2360	1326	**107**	2670	1617	2460	1466	70	450	2683x200x210	18	23
	2860	1607	**129**	3170	1898	2960	1747	70	450	3183x200x210	20	25
	3360	1888	**152**	3670	2209	3460	2058	100	450	3683x200x210	22	27
	3860	2169	**174**	4170	2490	3960	2339	100	300	4183x200x210	24	29
2,35 (21:9)	1860	791	**80**	2170	1082	1960	931	70	450	2183x200x210	16	21
	2060	877	**88**	2370	1168	2160	1017	70	450	2383x200x210	17	22
	2360	1004	**101**	2670	1295	2460	1144	70	450	2683x200x210	18	23
	2860	1217	**122**	3170	1508	2960	1357	70	450	3183x200x210	20	25
	3360	1430	**144**	3670	1751	3460	1600	100	450	3683x200x210	22	27
	3860	1643	**165**	4170	1964	3960	1813	100	300	4183x200x210	24	29
2,37	1860	785	**79**	2170	1076	1960	925	70	450	2183x200x210	16	21
	2060	869	**88**	2370	1160	2160	1009	70	450	2383x200x210	17	22
	2360	996	**101**	2670	1287	2460	1136	70	450	2683x200x210	18	23
	2860	1207	**122**	3170	1498	2960	1347	70	450	3183x200x210	20	25
	3360	1418	**144**	3670	1739	3460	1588	100	450	3683x200x210	22	27
	3860	1629	**165**	4170	1950	3960	1799	100	300	4183x200x210	24	29
2,40	1860	775	**79**	2170	1066	1960	915	70	450	2183x200x210	16	21
	2060	858	**88**	2370	1149	2160	998	70	450	2383x200x210	17	22
	2360	983	**101**	2670	1274	2460	1123	70	450	2683x200x210	18	23
	2860	1192	**122**	3170	1483	2960	1332	70	450	3183x200x210	20	25
	3360	1400	**143**	3670	1721	3460	1570	100	450	3683x200x210	22	27
	3860	1608	**165**	4170	1929	3960	1778	100	300	4183x200x210	24	29

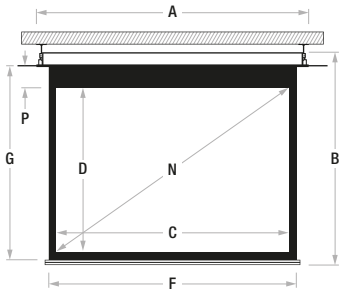

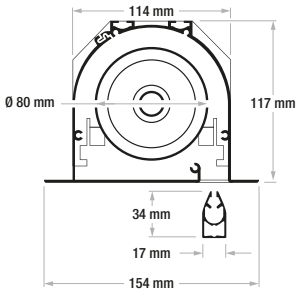

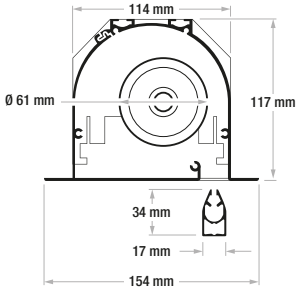

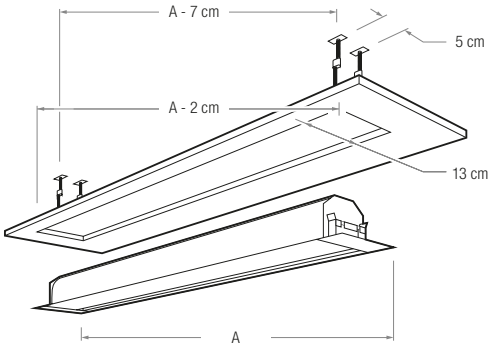

Inceel Without borders
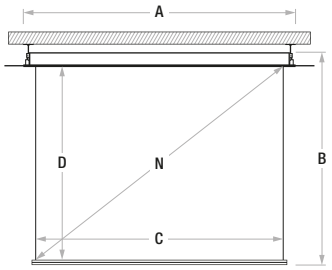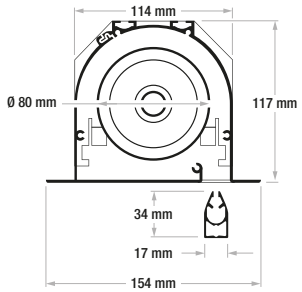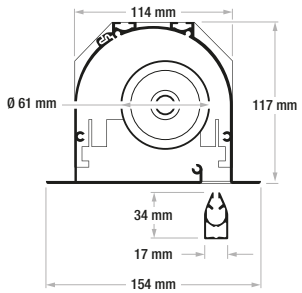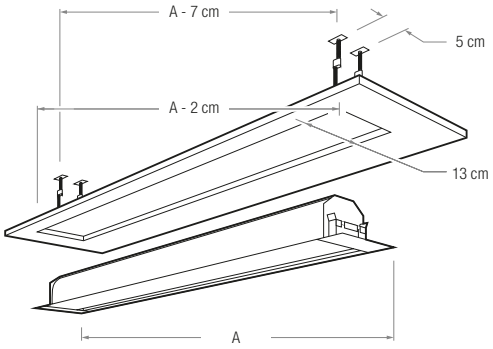
Aspect Ratio	Viewing Width	Viewing Height	Diagonal Inches	Overall Width	Overall Height	Packaging Dimensions	Net Weight	Gross Weight
	C	D	N	A	B	mm	kg	kg
1,00 (1:1)	1800	1800	**100**	1970	1951	1983x200x210	Available upon request	
	2000	2000	**111**	2170	2151	2183x200x210		
	2200	2200	**122**	2370	2351	2383x200x210		
	2500	2500	**139**	2670	2651	2683x200x210		
	3000	3000	**167**	3170	3151	3183x200x210		
1,33 (4:3)	2000	1504	**99**	2170	1655	2183x200x210	17	22
	2200	1654	**108**	2370	1805	2383x200x210	18	23
	2500	1880	**123**	2670	2031	2683x200x210	19	24
	3000	2256	**148**	3170	2407	3183x200x210	21	26
	3500	2632	**172**	3670	2783	3683x200x210	23	30
	4000	3008	**197**	4170	3159	4183x200x210	24	31
1,60 (16:10)	2000	1250	**93**	2170	1401	2183x200x210	16	21
	2200	1375	**102**	2370	1526	2383x200x210	17	22
	2500	1563	**116**	2670	1714	2683x200x210	18	23
	3000	1875	**139**	3170	2026	3183x200x210	20	25
	3500	2188	**162**	3670	2339	3683x200x210	22	27
	4000	2500	**186**	4170	2651	4183x200x210	24	29
1,78 (16:9)	2000	1124	**90**	2170	1275	2183x200x210	16	21
	2200	1236	**99**	2370	1387	2383x200x210	17	22
	2500	1404	**113**	2670	1555	2683x200x210	18	23
	3000	1685	**135**	3170	1836	3183x200x210	20	25
	3500	1966	**158**	3670	2117	3683x200x210	22	27
	4000	2247	**181**	4170	2398	4183x200x210	24	29
2,35 (21:9)	2000	851	**86**	2170	1002	2183x200x210	16	21
	2200	936	**94**	2370	1087	2383x200x210	17	22
	2500	1064	**107**	2670	1215	2683x200x210	18	23
	3000	1277	**128**	3170	1428	3183x200x210	20	25
	3500	1489	**150**	3670	1640	3683x200x210	22	27
	4000	1702	**171**	4170	1853	4183x200x210	24	29
2,37	2000	844	**85**	2170	995	2183x200x210	16	21
	2200	928	**94**	2370	1079	2383x200x210	17	22
	2500	1055	**107**	2670	1206	2683x200x210	18	23
	3000	1266	**128**	3170	1417	3183x200x210	20	25
	3500	1477	**150**	3670	1628	3683x200x210	22	27
	4000	1688	**171**	4170	1839	4183x200x210	24	29
2,40	2000	833	**85**	2170	984	2183x200x210	16	21
	2200	917	**94**	2370	1068	2383x200x210	17	22
	2500	1042	**107**	2670	1193	2683x200x210	18	23
	3000	1250	**128**	3170	1401	3183x200x210	20	25
	3500	1458	**149**	3670	1609	3683x200x210	22	27
	4000	1667	**171**	4170	1818	4183x200x210	24	29